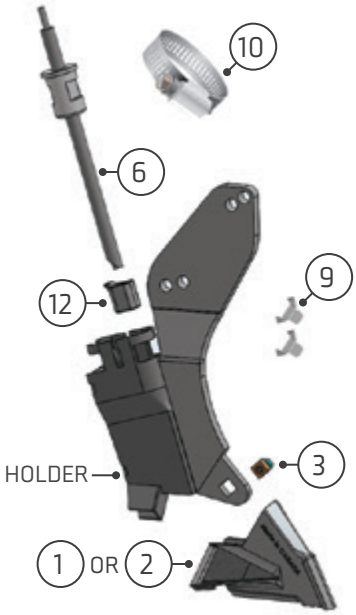

684-ASY-2711 (LEFT)
684-ASY-2712 (RIGHT SHOWN)

HOLDERS:
684-HLD-2711
684-HLD-2712 (SHOWN)

FITS: Case IH 800/900, NH P2070, Flexi-Coil PD5700 & 7200 (page 36)

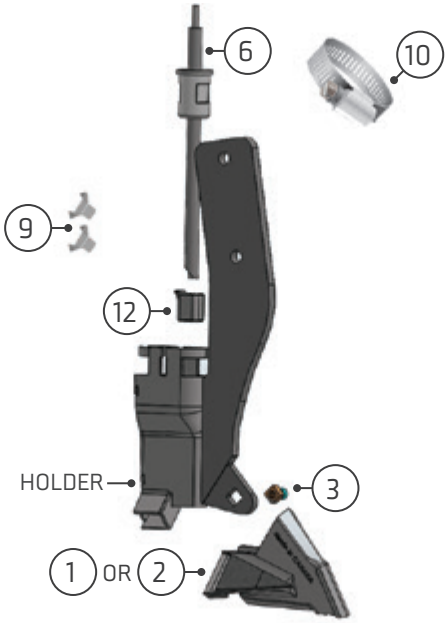

693-ASY-2711 (LEFT)
693-ASY-2712 (RIGHT SHOWN)

HOLDERS:
693-HLD-2711
693-HLD-2712 (SHOWN)

FITS: Morris Contour II & Morris Quantum (page 46)

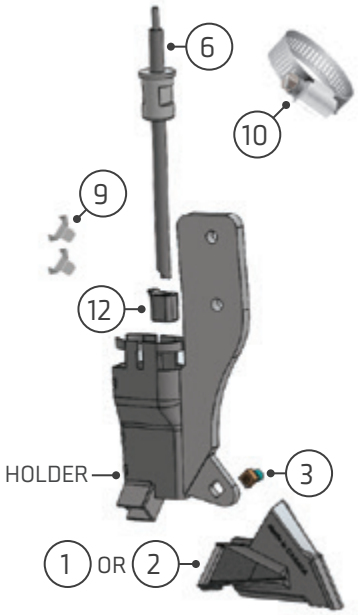

694-ASY-2711 (LEFT)
694-ASY-2712 (RIGHT SHOWN)

HOLDERS:
694-HLD-2711
694-HLD-2712 (SHOWN)

FITS: Case IH ATX 700, NH P2060, Flexi-Coil 5500 & Concord (page 36)

	PART	684-ASY-2711L	684-ASY-2711LP	684-ASY-2712L	684-ASY-2712LP	693-ASY-2711G	693-ASY-2711GP	693-ASY-2711L	693-ASY-2711LP	693-ASY-2712G	693-ASY-2712GP	693-ASY-2712L	693-ASY-2712LP	694-ASY-2711G	694-ASY-2711GP	694-ASY-2711L	694-ASY-2711LP	694-ASY-2712G	694-ASY-2712GP	694-ASY-2712L	694-ASY-2712LP
1	614-TIP-2711	■	■			■	■	■	■					■	■	■	■				
2	614-TIP-2712 (SHOWN)			■	■					■	■	■	■					■	■	■	■
3	200-BNC-3100	■	■	■	■	■	■	■	■	■	■	■	■	■	■	■	■	■	■	■	■
6	880-TUB-2711	■	■	■	■			■	■			■	■			■	■			■	■
9	880-HCL-0001					■	■			■	■			■	■			■	■		
10	880-HCL-1828	■	■	■	■	■	■	■	■	■	■	■	■	■	■	■	■	■	■	■	■
12	614-ACC-1000	■	■	■	■			■	■			■	■			■	■			■	■

NOTES: Two 880-HCL-0001are included with the granular openers only and are intended to provide additional security to installed hoses. **See page 103 for proper hose clip installation.** When ordering liquid phos openers call the factory for tube sizes.

When installing openers on Case IH 800/900, New Holland P2070/2075 & Flexi-Coil PD5070 you have two options as shown in the diagram below.